AUTOTRONICA Y ELECTRONICA PORTUGAL

Fig. 4: Wiring Diagram (3.0L With TCM - 1 Of 2)
1994 Dodge Caravan ES

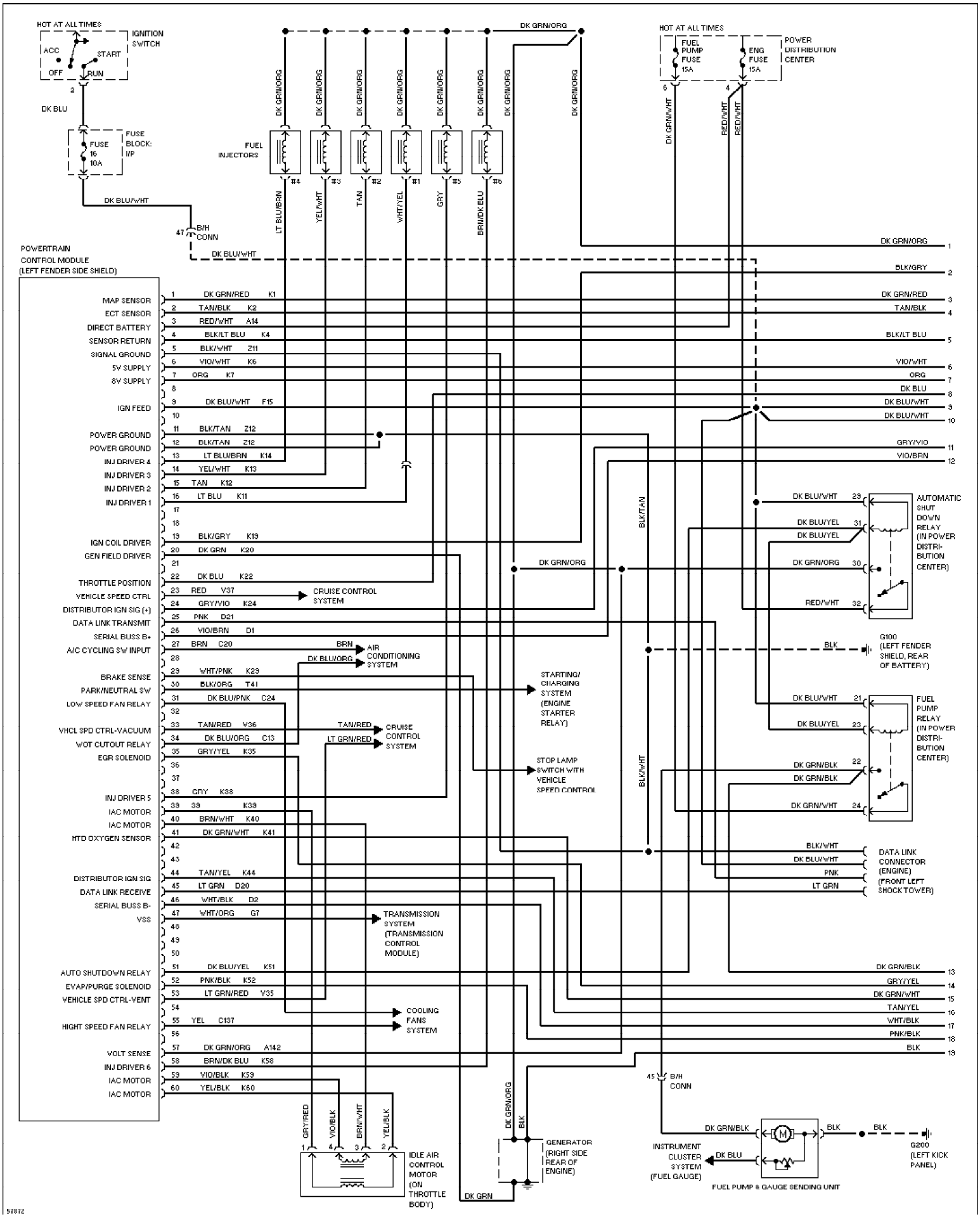

 © 2004 Mitchell Repair Information Company, LLC.