AUTOTRONICA Y ELECTRONICA PORTUGAL

Fig. 9: Cooling Fan Circuit
2000 Dodge Grand Caravan

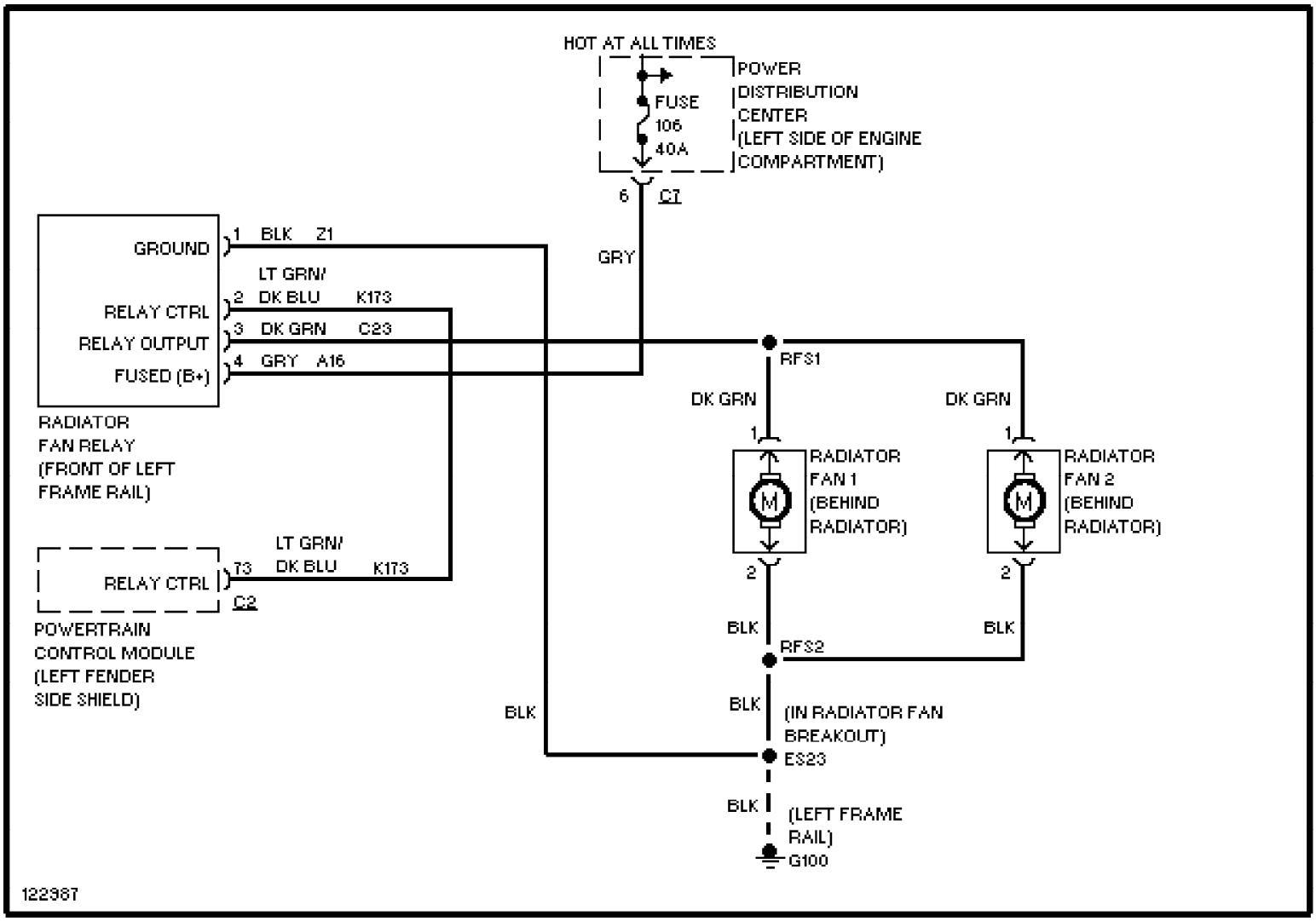

 © 2004 Mitchell Repair Information Company, LLC.